LEGEND	
NO.	DESCRIPTION
1	WATER MAIN
2	CORPORATION STOP & SERVICE SADDLE (IF NEEDED).
3	GOOSENECK
4	TYPE K SOFT COPPER
5	BULLET PIT (PLASTIC)
6	BRANCH PIECE (BY WD NO. 1)
7	WATER METER
8	METER COVER
9	TYPE K SOFT COPPER
10	APPLICANT'S SERVICE LINE
11	COMPRESSION COUPLING (SEE NOTE K)
12	EXPANSION WHEEL
13	METER YOKE ASSEMBLY
14	ELECTRONIC MARKER BALL W/ ZIP TIE (SEE NOTE L)

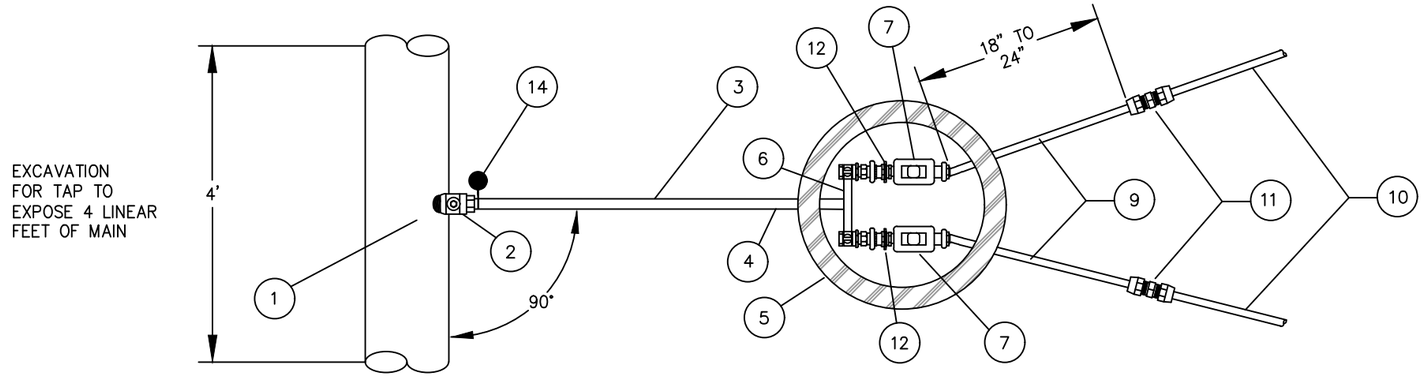

NOTES:

A. EXCAVATIONS SHALL BE IN ACCORDANCE WITH OSHA REGULATION (STANDARD – 29 CFR) SUBPART 1926.650 THROUGH 1926.652 AND APPENDICIES A THROUGH F.

B. THIS METER PIT IS NOT TO BE LOCATED IN AREA SUBJECT TO VEHICULAR OR PEDESTRIAN TRAFFIC, OR IN CONCRETE PAVEMENT.

C. IF METER IS NOT LOCATED IN RIGHT OF WAY, APPROVAL MUST BE OBTAINED FROM WATERONE.

D. WATERONE TO FURNISH ITEMS 2, 5, 6, 7, 8, 12, 13 & 14.

E. ALL EXCAVATION AND INSTALLATION TO BE COMPLETED BY CONTRACTOR.

F. UNDER NO CIRCUMSTANCE SHALL ANY OTHER EQUIPMENT OF ANY DESCRIPTION BE INSTALLED IN THIS PIT.

G. BRANCH PIECE SHALL BE CENTERED IN PIT.

H. DO NOT COVER COUPLINGS IN PIT.

I. SEE SERVICE APPLICATION BOOKLET FOR DEFINITIONS, RESPONSIBILITY OF APPLICANT AND GENERAL SPECIFICATIONS.

J. ALL REQUIREMENTS AND SPECIFICATIONS ARE SUBJECT TO CHANGE WITHOUT NOTIFICATION.

K. IF CUSTOMER SERVICE LINE IS PE OR PEX, A COMPRESSION COUPLING TO TRANSITION FROM COPPER TO PE/PEX IS REQUIRED. IF CUSTOMER SERVICE LINE IS METALLIC, THEN A SHORT SPOOL OF PE/PEX WITH COMPRESSION COUPLINGS WILL BE REQUIRED TO ISOLATE WATERONE AND CUSTOMER TUBING.

L. ELECTRONIC MARKER BALL TO BE INSTALLED BY WATERONE AT TIME OF TAP.

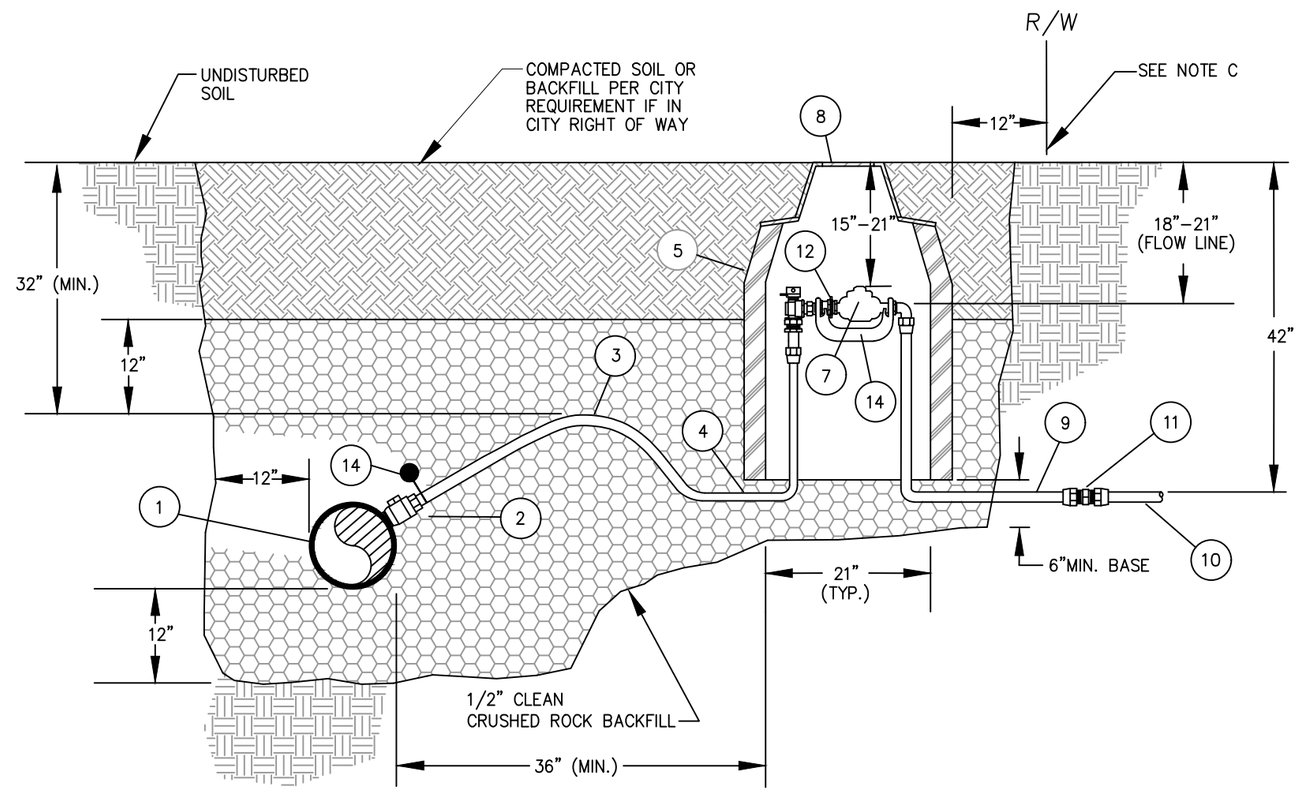

MANAGER OF DISTRIBUTION ENGINEERING INITIALS: DATE:	WaterOne Water District No.1 of Johnson County
MANAGER OF DISTRIBUTION WATER QUALITY INITIALS: DATE:	
MANAGER OF CONSTRUCTION MAINTENANCE VALVING & SERVICE INITIALS: DATE:	
DIRECTOR OF DISTRIBUTION INITIALS: DATE:	

1" SERVICE CONN. 5/8" MULTIPLE METER

STANDARD INSTALLATION

DRAWN BY: WRY/BKP/CAHM
DATE: 05-20-2009\4
DATE UPDATED: 09-21-2017

DWG NO. **ES-1821(5/8"B)**